B2Bpartner

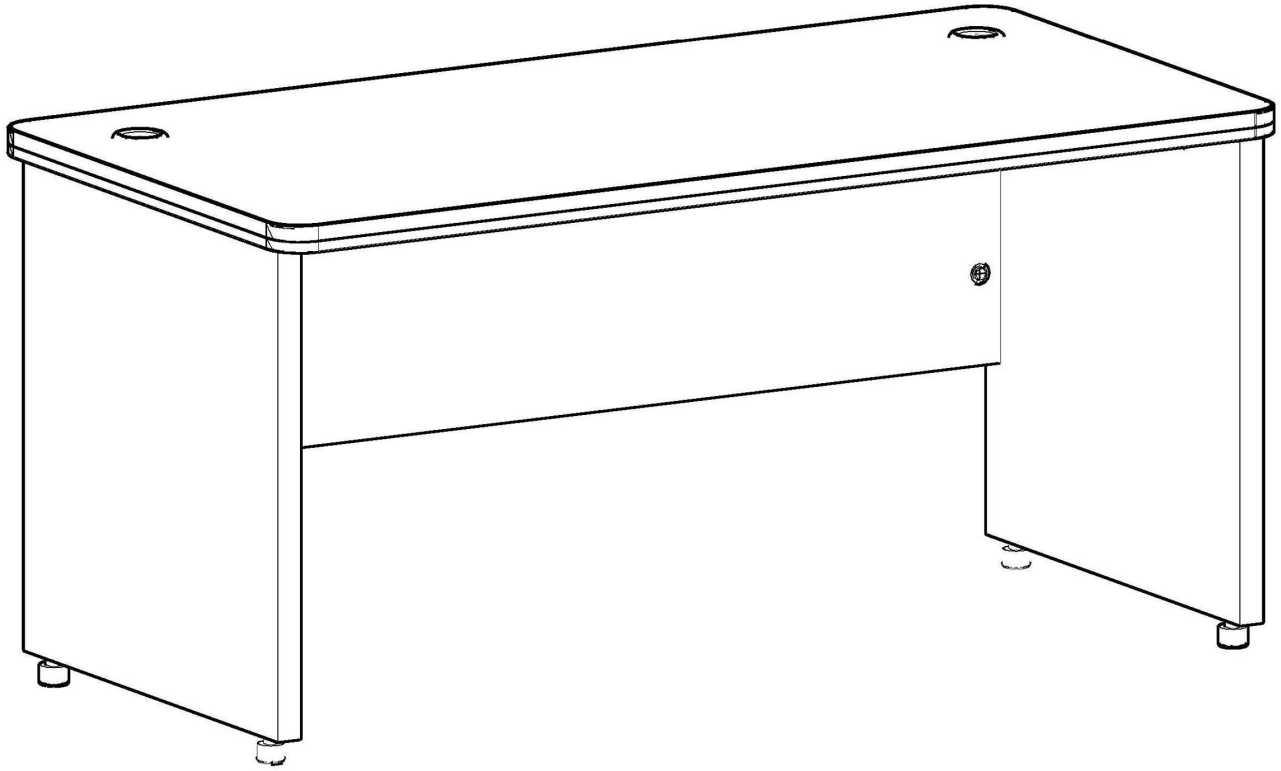

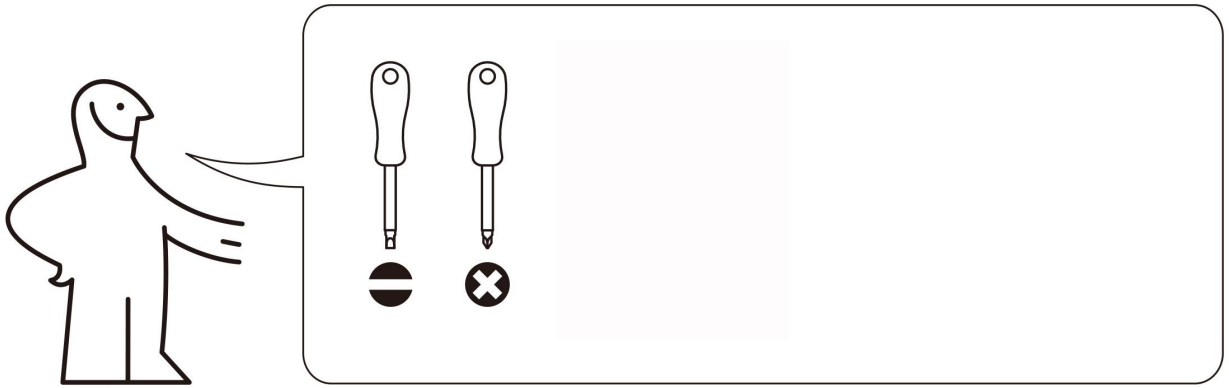

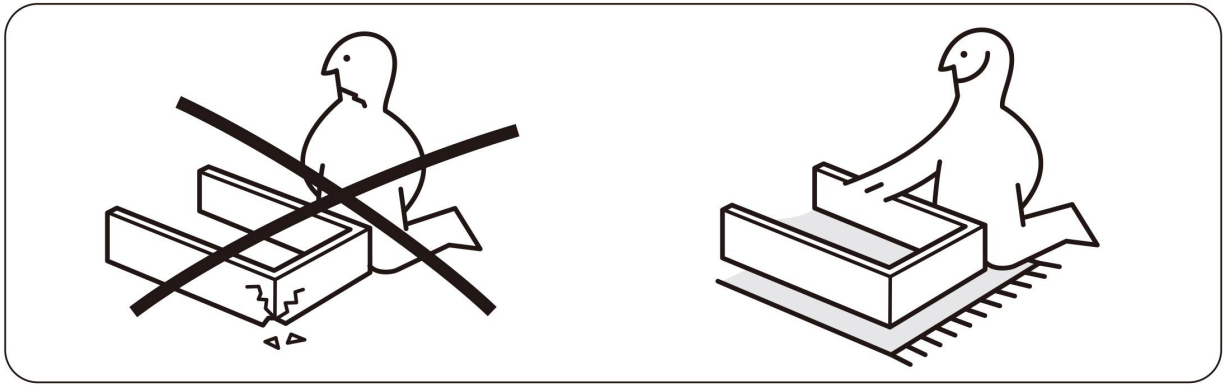

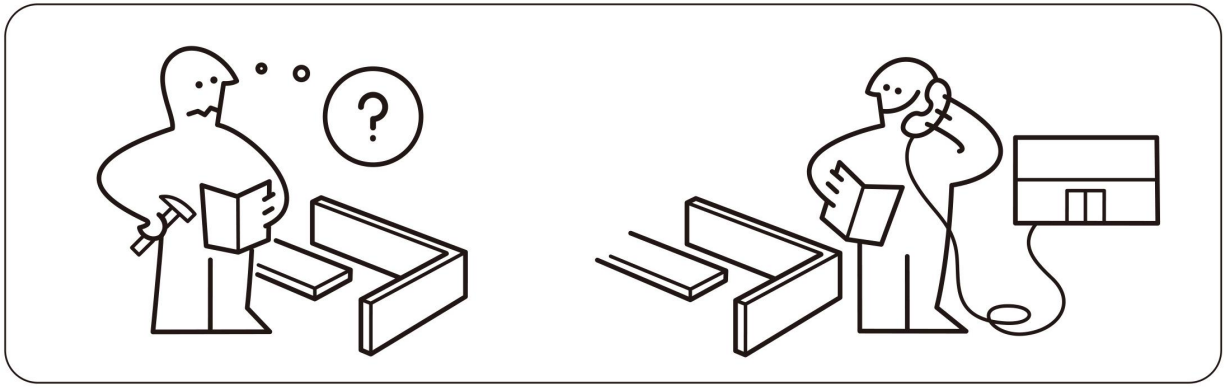

a	1	12PCS
b	2	12PCS
c	3	4PCS
d	4	2PCS
e	5	12PCS

pcs / ks / Stck

1

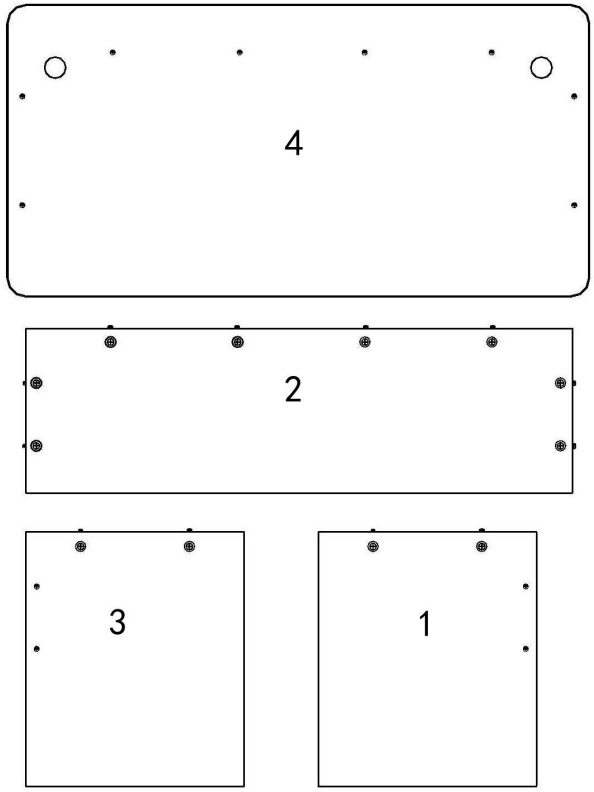

2

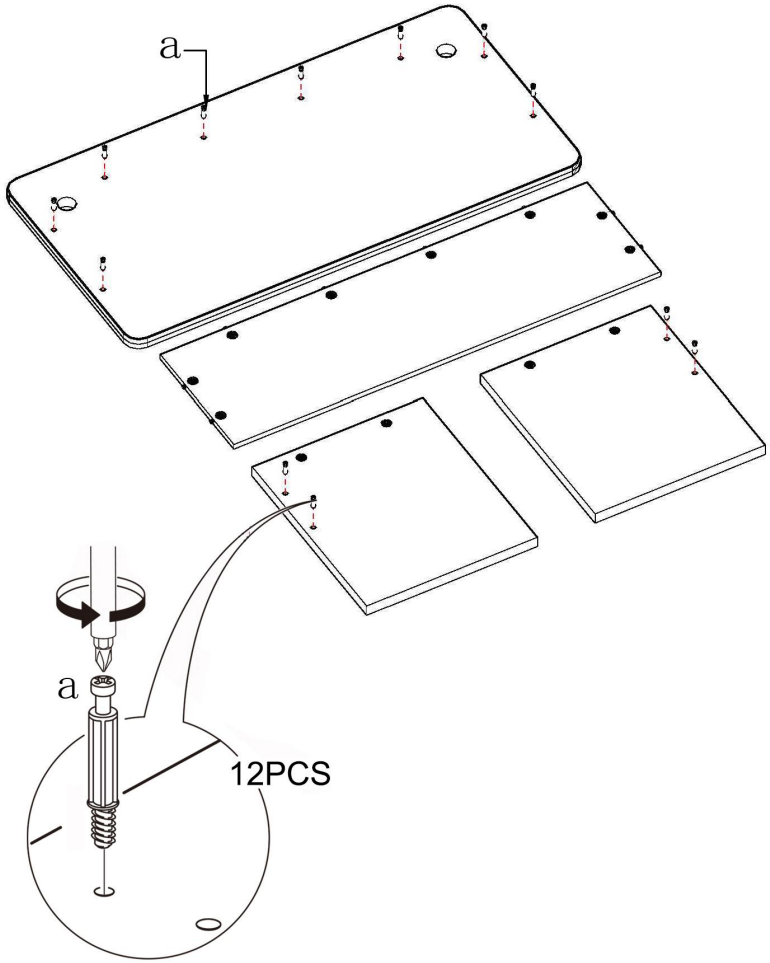

3

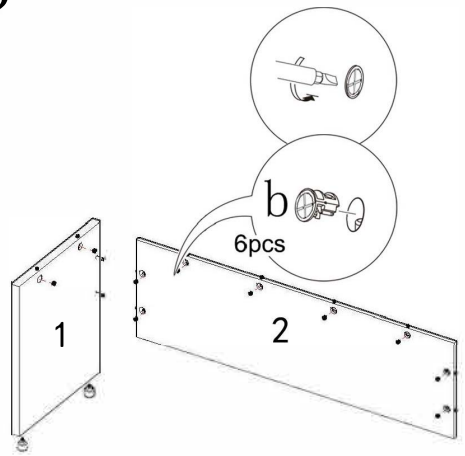

4

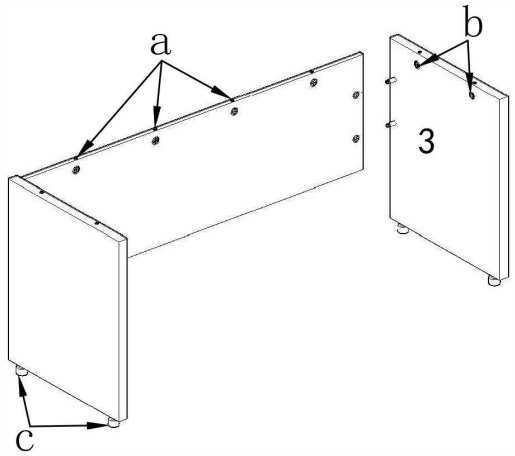

5

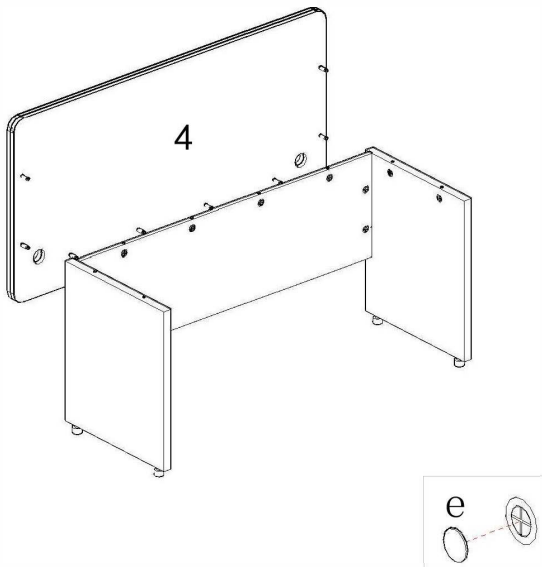
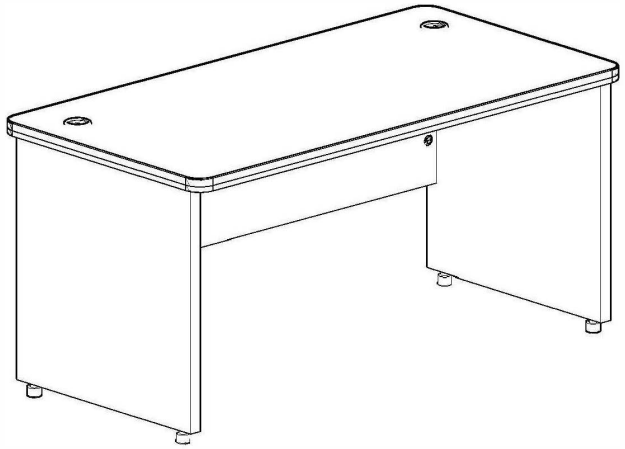
5